Incremental 80-mm-Dia. Rotary Encoder

LHS80 **Hollow shaft type**

General purpose Encoder with External Diameter of 80mm

- Incremental model
- External diameter of 80mm
- Resolution up to 2500 ppr.
- Various output type
- Hollow shaft type

Ordering Information

LHS80-□□□□□□□

1 2 3 4 5 6 7

Section 1: Basic model name

LHS80: 80mm Rotary Encoder(Hollow Shaft)

Section 2: Inner shaft size

25: **25mm** 25.4: 25.4 mm
28: **28mm**
30: **30mm**
32: **32mm**
35: **35mm**

Section 3: Resolution

10: 10 ppr
20: 20 ppr

40 50 60 80 100 120 125 150
200 225 240 250 256 300 360 400 450
480 500 512 600 625 720 750 800 900
1000 1024 1080 1200…up to 2500

Not indicated resolution is customizable

Section 4: Output phase

3: A B Z
6: A $\overline{A}$ B $\overline{B}$ Z $\overline{Z}$

Section 5: Output type

C: Complementary(also known as totem pole)
N: NPN Open collector
P: PNP Open collector
V: Voltage output
L: Line driver(**Power source 5VDC ONLY, Phase 6**)
T: Push-Pull(**With inverted signal, Phase 6**)

Section 6: Power Supply

8: 8-30 VDC(+/- 5%)
5: 5 VDC(+/- 5%)

Section 7: Cable outgoing type

G: Side entry cable

▲**Standard cable length is 2M**

Ratings and Specifications

Power supply: 5 VDC / 8-30 VDC
Resolution: 5-2500 ppr
Current consumption: 100mA(Load disconnected)
Load current: 50mA maximum per channel 20mA maximum per channel (Line driver output)
Output type: NPN/PNP open collector/Complementary/Voltage/Line Driver/Push-Pull(HTL with reverse signal)
Frequency: 100K HZ Frequency=RPM*Resolution/60
Maximum permissible speed: 2500 rpm
Shaft loading radial: 20N
Shaft loading thrust: 40N
Weight: Approxi 0.5KG
Protection level: IP50
Temperature: operation(-10°C~+70°C), storage(-30°C~+85°C)
Vibration resistance: 50m/s, 10-65 HZ, 1 mm double amplitude for 2 hours each in X, Y, and Z directions
Shock resistance: 980m/s, 6m/s 2 times each in X, Y, and Z directions
Starting torque: 5x 10^{-2} N.m Maximum

Output circuits and wave forms

Wave forms

Complementary/Open collector(NPN&PNP)/Voltage output

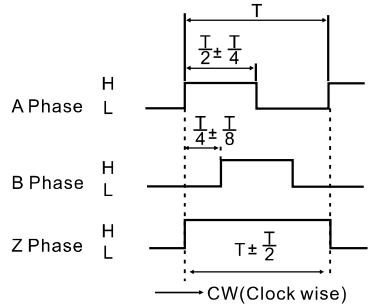

CW: As viewed from the shaft

Line Driver(RS422)/Push-pull(HTL with reverse signal)

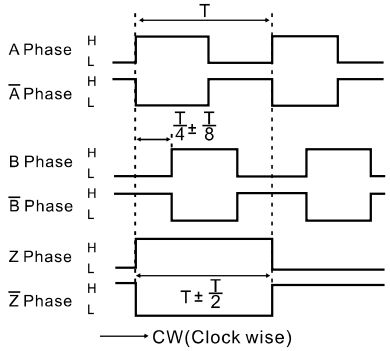

Output circuits

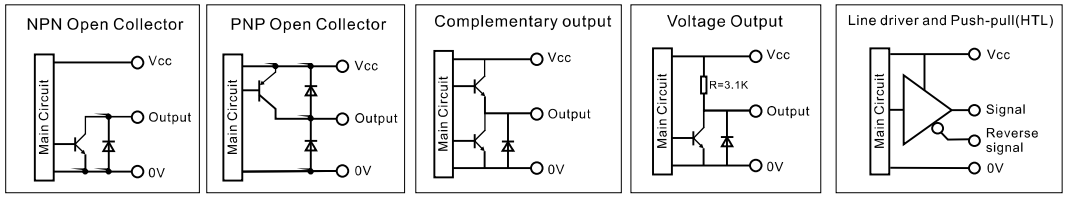

Wiring Details

Complementary/Open collector(NPN/PNP)/Voltage output

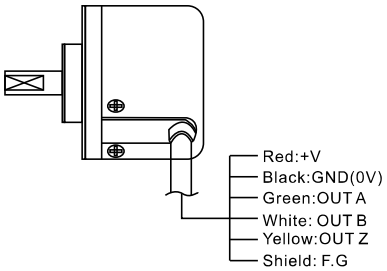

Line Driver/Push-pull(HTL with reverse signal)

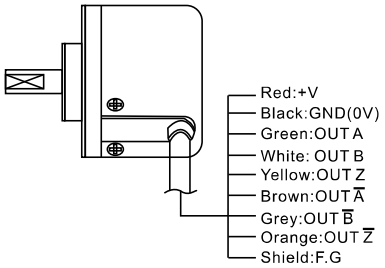

Mounting and Dimensions

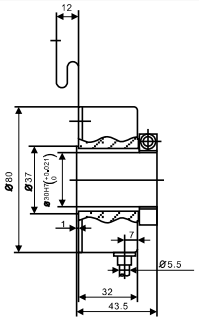

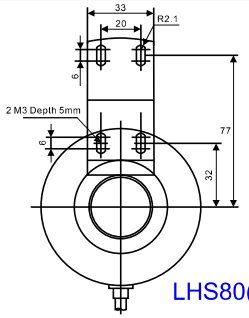
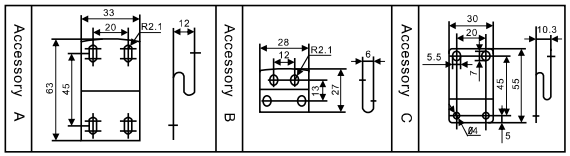
LHS80(hollow shaft type)